Borehole charge parts millisecond-delay blasting experience under the conditions of pc "northern gok" quarries

Shapurin O.V.

D.Sc. in engineering
Open cast mining department
Kryvyi Rih National University, Ukraine

Gura V.V.

Master, Mining engineer
PJSC "CMCP"
Kryvyi Rih, Ukraine

Grigoriev Yu.I.

Master, senior engineer
SE «SPI «Krivbassproekt»
Kryvyi Rih, Ukraine

Abstract
The results of experimental explosions in the Pershotravneviy and the Gannivskiy quarries of PC "Northern GOK" are shown. The distribution of borehole charges into two parts and millisecond-delay blasting of them relative to each other are used there. The constructive parameters of borehole charges (upper and lower) of stemming and inert space were grounded in such a manner that the entire 15-meters-high bench is divided into two almost equal parts. We conducted the analysis of direct and reflected waves distribution in the bench body after upper charge part actuating. It was shown the results of rocks breakage in experimental and test areas of explosive blocks.
Key words: DRILLING AND BLASTING OPERATIONS, EXPLOSIVE BLOCK, BOREHOLE, EXPLOSIVE MATERIAL, MILLISECOND-DELAY BLASTING

The experience of drilling and blasting operations execution in Northern GOK quarries shows that the great majority of oversize pieces are formed in idle part of the charge, where driving material is located, in sticky large-block rocks. However, the quality of explosive brakeage is satisfactory in high-strength but brittle rock in driving area due to blast wave reflection from the

bench roof while the problems with working out of bench toe often arise at the level of bench toe, where the compressive stresses from overlying rock sheets are added to the existing strength.

Thus, under different conditions of blasting operations carrying out, we observe the rocks breakage irregularity throughout the height of bench. This irregularity forms the manufacturing situations of various complexity degrees. These situations can be avoided during project works performing if the reasons causing them are considered. The method of millisecond-delay blasting of borehole charges parts is considered as the most appropriate method under such conditions.

Analysis of researches and problem statement

In the literature, we can find the statement that the method, which is introduced as distributed borehole charge design in combination with multiple asynchronical initiation of single charge parts, is an effective mean of explosion energy management when rocks destruction. This method gained widespread also in Kryvorizhzhya quarries.

The use of emulsion explosive Emonit-N with its gas bubbles, which serve as sensitizers in explosive charges, is the main typical distinction that differentiates modern blasting operations from the experience described in paper [7]. Concerning the suggested method of charge distribution into parts and millisecond-delay blasting of them, the size of inert space requires special attention. It will ensure the integrity of gas bubbles in a part of the charge that will be blasted later. Unlike the data in paper [7], in our situation, this parameter is better to be accepted within the limits of 3.5 - 4 m. At the same time, this technical solution reduces the driving length above the top of the charge up to 3.7 - 4.2 m, which again differs from experience described in scientific work [7].

Therefore, the research main objective described in this paper was the establishing of borehole charges rational designs and their spacing pattern in order to provide the improvement of drilling operations method and rocks explosive breaking quality under the conditions of Pershotravneviy quarry of PC “Northern GOK”.

Exposition of material and results

The inert space and driving parameters are formed in boreholes on benches of 14–17 meters high. These two sub-benches with almost the same height undergo millisecond-delay blasting. The driving above the upper charge and inert space between charges are close in size.

Declared method of millisecond-delay blasting of boreholes charges parts relative to each other was used with the aim of rocks breaking uniformity ensuring throughout the bench height in Pershotravneviy quarry of PC “Northern GOK” in one of the parts of the experimental block №78 located in the mountain +29/+17 m and blasted 26/6/2014. In another (control) explosive block area, the operations were performed in accordance with the passport of drilling and blasting operations. In this area of quarry, the tendency to bench toe elevation within the limits of 3.1 - 6.2 m was registered. On the contrary, the bench toe elevation within the limits of 1.0 - 2.0 m was observed at the level of lower edge on the side of the block front part and bench slope.

The block was formed of quartzite-hematite-silicate rocks with strength according to the prof. Protodiakonov scale f = 12-14. The boreholes water saturation of southern block part including experimental block was h_w=1–3 m. On average, the water column height along the northern block part reached h_w= 5–9 m according to survey measurement data. The total number of boreholes on the block was 440 units, among which the number of experimental block boreholes was 81units. The toe resistance line for the boreholes first row (TRLF) reached 7-25 m. The boreholes actual depth was h_{bh}=18 – 21m for the boreholes first row and h_{bh}=17 – 21 m for the next rows of boreholes according to survey measurement.

Based on these conditions, the boreholes spacing pattern 6 × 6.5 m was used. The length of the charge upper part was $l_{ch.up.}$=4.5 m, the weight was $Q_{ch.up.}$=290 kg respectively. This charge is able to break the rocks thickness of the upper sub-bench entire height. According to this, the existing concept of "sub-drilling" is conditional in this case.

For the mentioned conditions, the sub-drilling depth was accepted $l_{subd.up.}$=1.0 m. The length of the upper charge driving was 4.0 m and the height of sub-bench blasted by upper charge was $h_{up.subb} = l_{dr.}+l_{ch.up.} - l_{subd.up}$ =7.5 m.

Under the mentioned conditions, the specific charge for upper sub-bench was $q_{up.subb}$ =0.99 kg/m^3. In this case, the toe resistance line for upper sub-bench was W_{1up} = 6 m for the first row and W_{2up} = 6.5 m for the next rows. According to the passport, the explosive specific charge q was averaged. For these mining and geological conditions of the block consisting of four boreholes rows specific charge was q=1.3

kg/m^3. The manufacturing situation of a block is shown in Figure 1.

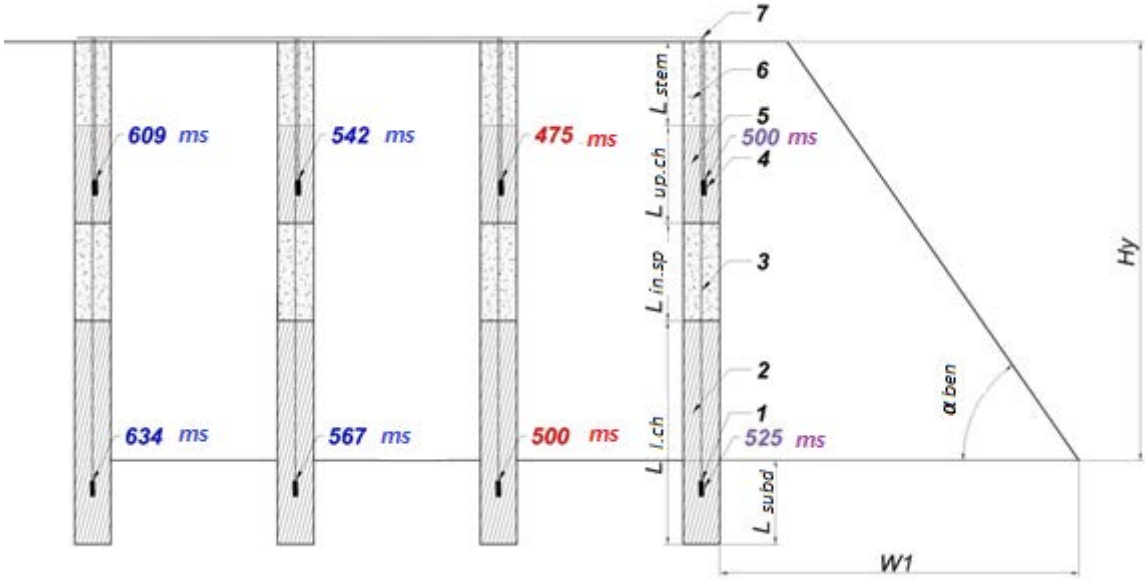

Figure 1. Disposition section of block experimental part: 1 – primer with borehole primer-detonator of 500 ms; 2 – lower charge of explosive Emonit-N; 3 – inert space from screenings; 4 - primer with borehole primer-detonator of 475 ms; 5 - upper charge of explosive Emonit-N; 6 – driving material; 7 – waveguides

The rock screening is used as inert spacing material between top and bottom parts of the charge. The space length was 3.5 m.

At that, the driving was carried out above the upper charge and its parameters were determined by the formula (1):

$$13\times d_{ch} \le L_{dr} \le 24\times d_{ch}\text{, m,} \quad (1)$$

where L_{dr} – the driving length, actually 4.0 m.

The explosive block wiring-up circuit was carried out with central cut. The total time of block operation was 4362 ms.

The upper primer was located at the level of conventional toe, i.e. its distance from bench toe was 7.5 m. At the same distance above the bench roof, the conventional initiator of conventional explosive charge was located. The reflected wave from the bench roof was formed by this initiator.

Direct wave as well as reflected wave velocity is 4.1 km/s in this rock massif. In this case, the wave will reach the roof in 1.6 ms and the bench slope in 1.1 ms. The conventional source of wave, which after having been reflected, moves from the bench slope, is marked as A and the conventional source of wave, which will move after having been reflected from the bench roof is B (Fig. 2).

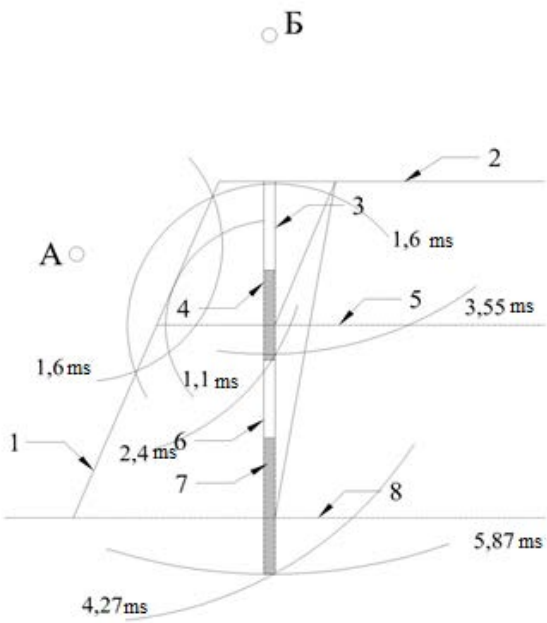

Figure 2. The cross section of the bench along the blast borehole with marking of direct and reflected blast waves caused by blasting of upper charge: 1 – bench slope; 2 - bench roof; 3 – part of the borehole with drilling; 4 - part of the borehole with upper charge; 5 – conventional toe formed by upper charge; 6 - part of the borehole with inert spacing; 7 - part of the borehole with lower charge; 8 – bench toe. The moments of blast wave (direct (1.1 – 1.6 ms) and reflected) coming up are marked.

The reflected wave that moves from the conditional source A reaches end face of upper

charge in 2.4 ms and the end face of the lower charge in 4.27 ms. At the same time, the reflected wave from the bench roof will reach the same limits through 3.55 ms and 5.87 ms respectively. The main parts of reflected waves were considered when these calculations are being carried out. In fact, the wave has a body that is asymmetrical: the fast build-up of suspense and deformations and slow diminishing of them. The reflected wave is increased in size with the growth. A slow diminishing of suspense and deformations after reaching their maximum is due to plastic wave show [4, 5]. At the distances illustrated in Figure 2, the end faces of upper and lower charges, the wave body length in similar rocks considering the way of direct wave to the reflection according to[4, 5] is respectively about 7 - 10 m. When researching, we were more interested in the last figure because the stresses in reflected wave are tensile and it is necessary to wait until they diminish and are replaced by compressive stresses. Only after that, it makes sense to blast the lower row. After time computation of the main part of the wave reflected from the bench roof (5.87 ms), time (2.44 ms), which is necessary for 10-meters-length wave body passing, was added. As the result, it was obtained the time value, after reaching of which the tensile wave will be replaced by compressive wave namely 8.31 ms. This wave will increase its length again and the change will be directly proportional to its asymmetry providing more favorable conditions for blasting of the lower charge. The 25 ms deceleration between blasting of borehole charge two parts accepted by us meets requirements of our experiment. In this context it is meant that the lower charge is blasted in the conditions of compressive stresses.

Calculating the explosive specific charge for the lower charge, the distance (h_l) from the bench toe to the conventional toe, which is worked out by the upper charge, is $h_l = H_{ben} - h_{up} = 17 - 7.5 = 9.5$ m. The height bench value 17 m is not passport value, it is real for the block No78. Sometimes, this value was even being increased. The rocks area, which is to be broken, has the trapezoid shape, which upper base in scale is 5.5 m and the lower one is 9.5 m.

Under the conditions of 6 m distance between the boreholes in a row, will have the volume, which is to be broken by lower charge:

$$V_l = \left(\frac{5{,}5+9{,}5}{2}\right) \times 9{,}5 \times 6 = 427{,}5\ m^3$$

If the mass of lower charge was 400 kg, the specific charge of explosive was q = 0.958 kg/m^3 along the whole bench. It should be noted that according to the drilling and blasting operations passport for the rocks of the strength f=12–14, the specific charge is q=1.3 kg/m^3, which proves the results economic efficiency.

The area in Gannivskiy quarry of PC “Northern GOK” was blasted in parallel with Pershotravneviy quarry block by the same implementation pattern of internal-borehole deceleration (from top downward). 10/23/2014 it was blasted the experimental block No106a, where it was allocated an experimental site for charges divided into two parts with millisecond-delay blasting: first the upper charge (475 ms) and then the lower (500 ms). The block was formed of coarsely-stratified magnetite- silicate quartzites with strength coefficient according to the prof. Protodiakonov scale f=16. At that, the design height of the bench was 15 m and the actual one was 18.0 m. The average value of the toe resistance line is 12.65 m; the individual values have reached 16 m; the average distance between the boreholes in a row is 6 m. But dominated values were 6.5 m (50%); the average distance between the boreholes was 5.9 m including values 6.0 - 6.5 m, which were 59%. The average depth of the boreholes was 20.0 m. According to the surveying measurements, the boreholes were characterized by heavy watering. The height of the water column ranged from 9 to 14 m.

The parameter variation of boreholes location caused the variation of the specific charge of explosive, which was changed within the limits of 1.0 - 1.56 kg/m^3 in the next rows. The average value for all the rows in the block experimental part was 1.082 kg/m^3 and in control part – 1.177 kg/m^3.

The breaking quality measuring results are shown in Table 1.

Table 1. The breaking quality measuring results

Area of explosive block	Strength coefficient, f	Fractions content % within the size, mm					Medium size of lump, mm
		0 -200	201-	401-	801-	>1200	

			400	800	1200		
Pershotravneviy quarry							
Experimental	12-14	55.62	28.91	14.1	1.28	0.09	238
Control	12-14	49.75	29.7	17.91	2.37	0.27	273
Gannivskiy quarry							
Experimental	12-14	53.03	27.61	16.54	2.46	0.36	257
Control	12-14	49.66	27.85	18.58	3.3	0.61	280

The physical processes of blast waves movement from borehole charges parts to the block experimental part No106 are similar to those, which were considered when analyzing of charges actuating in the block No78 of Pershotravnevyi quarry. The analysis of lumpiness measurement shows that the use of millisecond-delay method when explosive blocks blasting is more effective in rocks of the strength f=12–14, since their medium lump size will be reduced in experimental sites by 14.7% compared with control ones while it will be reduced only by 9% in harder rocks (f=16). The same dependence is observed during measurement of oversize material content.

Conclusions and future research line

The efficiency of borehole charges distribution into two parts and millisecond-delay blasting of them with the deceleration interval 25 ms was proved by conducted experimental explosions in two quarries of PC “Northern GOK”. The parameters of the charges location and the results of blasting operations have been shown.

The following improvements are achieved: the appearance of a new free surface at the level of the charge top part end face with the subsequent formation of the reflected wave from it after lover charge part actuating; unloading of the bench lower part prom the pressure of rocks upper layers, which are raised in the air by the upper part of the charge.

Further research is planned to be directed towards the expansion of the conditions of proposed method use.

References

1. Kuprin V.P., Kovalenko I.L. *Rozrobka i vprovadzhennya emulsiynikh vibukhovikh rechovin na karierakh Ukrayini*. [Development and implementation of emulsion explosives in quarries of Ukraine]. Dnipropetrovsk, USUCT, 2012. 243 p.
2. Bikov K.E., Nosov V.M. Pat. 31419 Ukraine MPK7F42D1 / 02. The devices for dispersion of an explosive charge in the watered borehole. Publ. 04/10/2008, Bull. No7
3. Kuprin V.P. (2012) Assessment of emulsion explosives detonation characteristics of Ukrayinit and Emonit brands. *Inform. bull. USPV*. No1, p.p. 6–12
4. Efremov E.I. (2011) The selection of the method and location parameters of intermediate detonators using borehole charges. *Inform. bull. USPV*. No1, p.p. 2-6
5. Mel'nikov N.V. (1962) Influence of charges design on the results of blasting operations. *From the book of reports of IV Symposium in Rolla (United States, 1961).*Moscow, Gosgortekhizdat.
6. Marchenko L.N. (1963) Experience of use of charges with air spaces. *Theses and materials of the scientific technical seminar «Sovershenstvovanie burovzryvnykh rabot na otkrytykh razrabotkakh» [“Improvement of drilling and blasting operations in open cast mining”]*. Dnepropetrovsk, Promin.
7. Efremov E.I. Vzryvanie s vnutriskvazhinnymi zamedleniyami. [*Millisecond-delay blasting*]. Kiev, Naukova dumka, 1971. 167p.
8. Kuk M.A. *Nauka o promyshlennykh vzryvchatykh veshchestvakh*. [The science of industrial explosives. Trans. from Engl.] Moscow, Nedra, 1980. 453p. The original edition: USA, 1974, p.p. 382-385
9. Duvall W.I, Atchison T.C., “Rock Brekage by Explosives”, RI 5356 (Bur. of Mines), Sept/ 1957; Missouri School of Mines and Metallurgy, Symposium of Mining Research, TS No/ 97, p. 100 (1959), L. Obert, Bur. of Mines RI 6053 (1962).
10. Hino K. Theory and Practice of Blasting, Nippon, Kayaku Co., Ltd., 1959

11. Johansson C.H., Persson P.A. Detonics of High Explosives, Academic Press, New York, London, 1970; Persson P.A., Lundborg N., Johansson C.H., "The Basic Mechanisms in Rock Blasting", Proceedings of the Second Congress of the International Society of Rock Blasting 5 – 3, Belgrade, Yugoslavia, 1970