UDC 669.1.013.6-62 Production

Basic engineering for gas mixing stations At metallurgical enterprises

B. N. Vyshnevskyi
State-Owned Ukrainian Institute for Designing Iron and Steel Works

G. P. Voitkovskyi
State-Owned Ukrainian Institute for Designing Iron and Steel Works

T. O. Kapustina
State-Owned Ukrainian Institute for Designing Iron and Steel Works

A. A. Shcherbakov
State-Owned Ukrainian Institute for Designing Iron and Steel Works

A. S. Lebedev,
PJSC "Zaporizhstal Steel Plant"

Abstract. In this publication the authors analyze reasonability and technical-and-economic efficiency of gas mixing stations building with the objective to handle steel plant secondary fuel gases as a natural gas saving measure. Such methods as design studies and engineering calculation studies presented in this article satisfy the needs of the analysis reported in the article. The research has resulted in the certain amount of the natural gas saved and is expressed in the precise value for the currently operated plant. The authors also show their new scheme of secondary fuel gases mixing developed for three kinds of gases while the acquired data can be applied for actual design practice.

Key Words: *design, gas mixing station, secondary fuel gases, natural gas, technical-and-economic indices.*

Challenging problem. Due to the necessity to utilize completely the low-calorie secondary fuel gases, for example, blast-furnace ones, gas mixing stations are applied. The heat-producing value of blast-furnace gas varies from 2 931 kJ/Nm^3 to 3 977 kJ/Nm^3 (from 700 kcal/Nm^3 to 950 kcal/Nm^3). It turns out to be impossible either to organize the operation of the units consuming fuel intensively with the due output or to reach the desired heat temperature of metal with the blast-furnace gas only since the above mentioned heat of its combustion is low. For this reason mixtures of blast-furnace gas are applied along with the natural gas (combustion heat is 33 494 kJ/Nm^3 or 8 000 kcal/Nm^3), coke-oven (16 747 kJ/Nm^3 or 4 000 kcal/Nm^3) and converter gases (7 432 kJ/Nm^3 and 1 775 kcal/Nm^3).

Research Aim. The current publication aims at solving the practical problem of natural gas saving under conditions of PJSC Zaparozhstal Steel Plant by virtue of maximal use of secondary fuel gases as a fuel for heating furnaces of CCM casting-rolling modules.

Research Material. In this article, we consider

$$V_{BFgas} = \frac{Q^{flow}_{NG\,heat} - Q^{flow}_{mix\,heat}}{Q^{flow}_{NG\,heat} - Q^{flow}_{BF\,gas\,heat}} \times 100, \%; \qquad V_{NG} = (100 - V_{BF\,gas}), \%$$

the issues of basic engineering for gas mixing stations, the mixture composition calculations, the diagram, the placement scheme, the combinations and technical-and-economic indices for the specific cases of two casting-rolling modules within CCM machine, heating tunnel furnace and sheet rolling mill with the output of 2.5 million tons of hot-rolled coils per year. The developments have been carried out at the stage of a project, which approximately corresponds to European term of basic engineering.

The binary mixtures (blast furnace gas – natural gas; coke gas – blast furnace gas) and ternary mixtures (blast-furnace gas – coke gas – converter gas) are used. The consumption rate of the mixture and its combustion heat are commonly set during the designing stage within the manufacturing specifications of the heat-consuming units, while the mixtures are prepared at the gas mixing stations, which belong to the gas supply facility of the metallurgical enterprise as the constituent of the power supply facility, according to [1].

Calculations and Discussion.

In most cases, the mixture composition calculations are performed as based on the fact that the gas volume ratios do not change.

Furthermore, the calculation of the binary mixture can be carried out by means of the following formulae (let us take for example the mixture of the blast-furnace gas and the natural gas on condition that each component amount is determined in %vol.):

Where V_{mix} and $Q^{flow}_{mix\,heat}$ are mixture volumetric flow rate and mixture combustion heat in Nm^3/h and kcal/Nm^3 while $V_{BF\,gas}$ and $Q^{flow}_{BF\,gas\,heat}$, V_{NG} $V_{п}$ and $Q^{flow}_{NG\,heat}$ are the similar sets for the blast furnace gas and the natural gas, respectively.

The ternary mixture is prepared on the base of the binary mixture (the blast-furnace + gas-converter gas), having been prepared in one of the gas mixing stations. Afterwards in the different gas mixing station, the natural gas is being added into this prepared binary mixture until the desired combustion heat is reached provided that the mixture flow rate is known. The calculations for the preliminary prepared mixture of BF gas-converter gas plus natural gas are made by the similar formulae. Upon that, the natural gas saving is provided.

In accordance to the current Ukrainian legislation, the gas mixing station design has to meet simultaneously both the industry-specific guidelines and nationwide standards. They are the Laws and Regulations of Labour Safety (NPAOP) 27.1-1.09-09 "Rules of Labour Safety for the Gas Supply Facilities at Enterprises of Ferrous Metallurgy" (industry-specific guidelines) and Fire Safety Requirements (NAPB) Б.03.002-07 "Standards to Determine the Categories of Explosion and Fire Hazard for Premises, Buildings and External Installations" (nationwide standards).

Thus, the explosion and the fire hazards of the gas mixing stations can be classified as the objects of $A_н$ category (external installations), according to NAPB Б.03.002-07. However, according to 27.1-1.09-09 "Rules of Labour Safety for the Gas Supply Facilities at Enterprises of Ferrous Metallurgy", their external above-ground pipelines, including the areas at pipeline fittings, valves, flange connections, instruments, automatic equipment and so forth are classified as explosion-proof objects since the gas operational pressure for them is 15 kPa at the exit.

Under conditions of the contradictions between the Standards and the Rules acting on the territory of Ukraine, the design documentation observes the priority of the nationwide standards over the industry-specific guidelines. Therefore, in the projects for gas mixing station design, the category $A_н$ (external installations) of explosion and fire hazard is assigned to gas mixing stations, according to NAPB Б.03.002-07. Moreover, in its turn there arises the necessity to carry out the calculations for the excessive pressure as required by the mentioned nationwide standard.

In [2], it is suggested that thanks to the substitution of the natural gas with blast-furnace one, the economy could be achieved even under condition of the blast-furnace gas price lower than 14 UAH/1000 Nm³ and $Q^{flow}_{BF\ gas\ heat}$ = 4190 kJ/Nm³ (1000 kcal/Nm³) or when the price of the natural gas was higher than 367 UAH/1000 Nm³ and $Q^{flow}_{NG\ hear}$ = 33520 kJ/Nm³ (8000 kcal/Nm³).

In case when the price of the natural gas is $250/1000 Nm³ or 250×5=1250 UAH/1000 Nm³ (the exchange rate of $1=5 UAH, registered when the current publication was being developed in 2005), the economic efficiency based on such substitution is provided a priori. Thus, at the present time, the customers for the metallurgical units, shops and complexes set the requirements of the maximal substitution of the natural gas with the secondary fuel gases.

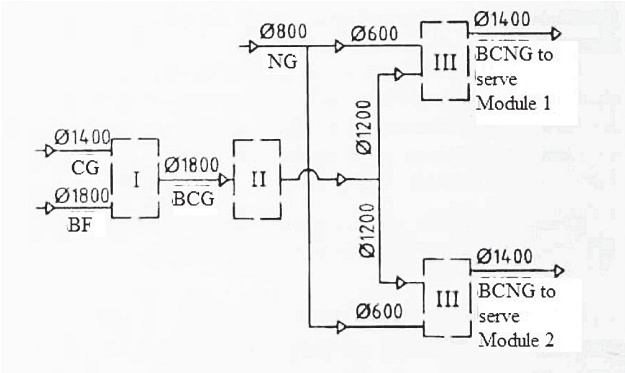

Figure 1. Flow Diagram for the Heating Furnaces Serving Two Casting-Rolling Modules.

Note: I – Gas Mixing Station (Blast-Furnace Gas-Converter Gas); II – Gas Booster Station; III – Gas Mixing Station (Blast-Furnace Gas-Converter Gas-Natural Gas); CG – Converter Gas; BF– Blast Furnace Gas; BCG – Blast Furnace Gas– Converter Gas; NG – Natural Gas; BCNG – Blast-Furnace Gas-Converter Gas-Natural Gas; → – Ambient Flow.

The flow diagram for the heating furnaces serving two casting-rolling modules is given in Fig.1. The principle scheme for the gas mixing stations operated with the binary mixture is illustrated by Fig. 2 and that for the operation with the ternary mixture is in Fig. 3. The layouts of the gas mixing stations are open and for the binary mixture and are shown in Fig. 4 and Fig. 5 while the technical-and-economic indices are given in the table.

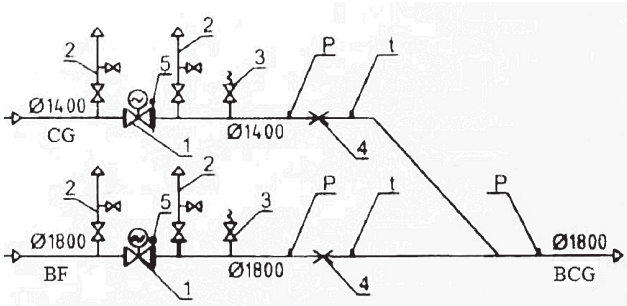

Figure 2. The Principle Scheme for the Gas Mixing Stations (Blast-Furnace Gas-Converter Gas).

Note: 1 – Plugging Device; 2 – Gas Vent Line; 3 – Stream Valve/ Nitrogen Valve; 4 – Flow Meter; 5 – Flange Device; P – Pressure Measurement; t – Temperature Measurement.

Commonly, gas mixing stations are located at the height, where their pipelines for the gases being mixed are located, that is higher than the profiles of the railway or the motor transport. Necessary load-carrying devices are arranged over the gas mixing stations. Under them, the other objects can be placed, for example, a gas booster station, in which the boosters are arranged for gas pressure rise up to the required value.

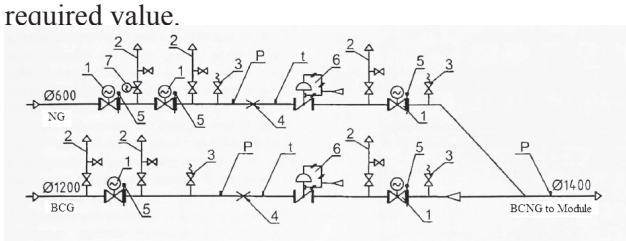

Figure 3. Principle Scheme of Gas Mixing Station for Blast Furnace Gas-Converter Gas-Natural Gas Mixture.

Note: 6 – Control Valve; 7 – Shutoff Valve Equipped with an Electric Drive on the Release Flare for the Natural Gas Removal into the Atmosphere.

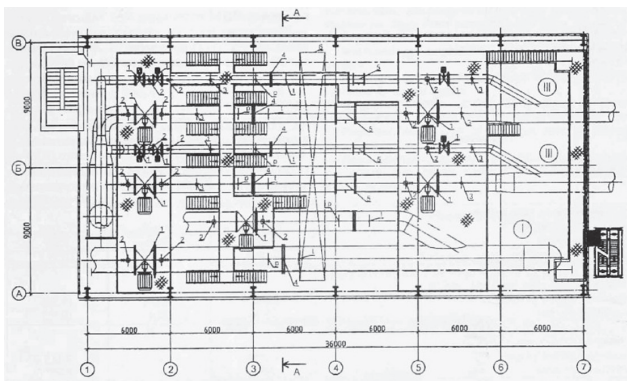

Figure 4. Equipment Layout for Gas Mixing Stations.

Note: I – Gas Mixing Station (Blast-Furnace Gas-Converter Gas); III – Gas Mixing Station (Blast-Furnace Gas-Converter Gas-Natural Gas) Module; 1 – Plugging Device; 2 – Gas Vent; 3 – Stream Valve/ Nitrogen Valve; 4 – Flow Meter; 5 – Control Valve; 6 – Single-Beam Hoist Crane of 50 t Capacity; P – Pressure Measurement; t – Temperature Measurement.

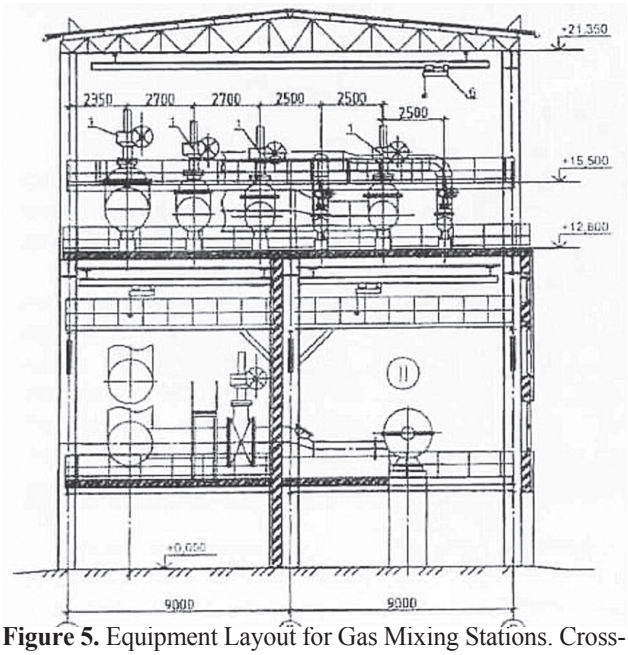

Figure 5. Equipment Layout for Gas Mixing Stations. Cross-Section A-A.
Note: II – Gas Booster Station; The rest is identical with Fig. 4.

The present-day gas mixing stations work in fully automated mode excluding the need for any maintenance staff present all the time. At this, the main data of the instrument readings are brought to the operational station into the premises of the operator, who monitors the process, for example, the state of CCM casting-rolling modules.

Considering the data of the table, it is possible to understand that for the specific case analyzed in it, the usage of the ternary mixture in the average is capable of providing the natural gas economy as much as 2 069 Nm^3/h. The operation of CCM casting-rolling modules is required as much as 7 440 hours annually, therefore the annual saving of this energy carrier for one CCM casting-rolling module is planned to be 15 393 400 Nm^3. The total saving in monetary terms for two mills is about $7.7 mln per year at the natural gas cost of $250/1000 Nm^3.

Table 1. Technical-and-Economic Indices of the Gas Mixing Stations

Index Name	Binary Gas Mixture in Gas Mixing Stations for One CCM Casting-Rolling Module	Binary Gas Mixture in Gas Mixing Stations for Two CCM Casting-Rolling Modules (see Fig.1)	Ternary Gas Mixture in Gas Mixing Stations for One CCM Casting-Rolling Module
1. The mixture composition	Blast-Furnace Gas and Natural Gas	Blast-Furnace Gas and Converter Gas	Blast-Furnace Gas, Converter Gas and Natural Gas
2 Mixture Flow Rate, Nm^3/h maximal regime medium regime	 55 100* 29 200*	 95 970 50 860	 55 100* 29 200*
3. Mixture Combustion Heat (kJ/Nm^3)	9420.3	5735.9	9420.3
4. Content of the blast-furnace gas in the mixture at its combustion heat of 3140.1-3349.44 kJ/Nm^3 (Nm^3/h) maximal regime medium regime	 44 072 23 360	 38 470 20 400	 19 235 10 513
5. Content of the National Gas in the Mixture at its Combustion Heat of 33494 kJ/Nm^3 (Nm^3/h) maximal mode medium mode	 11 018 5 840	 - -	 7 115 3 771
6. Economy on the Natural Gas, (Nm^3/h) maximal mode medium mode	-	-	 3 903 2 069
7. Content of the converter gas in the mixture at its combustion heat of 7432 kJ/Nm^3 (Nm^3/h)	-	57 500	28 750
8. Total complex cost of the gas mixing stations (UAH without VAT)	9 700	7 000	9 900
9. Maintenance Staff (Equipment Inspector) (people)	1	1	1
10. Unit Cost for the Gas Mixing Stations (UAH/1000 Nm^3/h per the mixture)	0.176	0.0729	0.179
11. Set power of a heat load (kW)	95	100	110

* – according to the data of the equipment manufacturer

Conclusions.

Modernization in the metallurgical industry goes hand in hand with the introduction of the technologies which utilize the secondary fuel gases from enterprises. This being said that the use of natural gas is minimized. Presently, the tendency is inclined towards the substitution of the natural gas with the coke oven waste gas and converter gas in the gas mixtures for the main metallurgical and the power units (the heating furnaces of the rolling departments, the lime processing production, igniting furnaces of the sinter machines, steam and water boilers, etc.) Therefore, the gas mixing stations at the metallurgical enterprises remains currently to be of central interest.

If the gas mixtures being consumed eliminate the natural gas in their compositions or possess its minimal amounts, this guarantees that the expensively purchased energy carrier of natural gas is to be saved. The operation of two CCM casting-rolling modules with the annual production output of 2.5 mln tons of hot-rolled coils is capable of saving 30 786 800 Nm^3/year or, expressing it in monetary terms, approximately $7.7 mln/year (at the natural gas cost of $250/1000 Nm^3).

The main focus of the primary technical and diagram solutions on the gas mixing stations is presented on the general outlay. The equipment layout, the equipment automation and other issues are addressing the minimization problem for capital expenditures and operational costs.

References

1 Vyshnevskyi B. N., Vovk V. M., Zaslavskyi V. S., Khyzhniak A. F., Pervak R. E. (2007) Promyshlennaja teplojenergetika v rabotah Ukrgipromeza [Industrial Thermal Power Engineering in Works of Ukrgipromez]. *Metallurgicheskaja i Gornorudnaja Promyshlennost'* [Metallurgical and Mining Industry] No. 2. p.p. 108-111.

2. Kolodiazhnyi V.S., Hubynskyi M.V. Romanenko V.I., Volkov V.F., Tretiak V.V., Triapichkin M.G. (2006) Voprosy ispol'zovanija smeshannogo gaza v metallurgii [Issues of Using the Mixed Gases in Metallurgy]. *Metallurgicheskaja i Gornorudnaja Promyshlennost'* [Metallurgical and Mining Industry]. No. 3, p.p. 106-109.


Photographer Miroslav Orshak©