UDC 532.73 : 691.714 : 621.78.015 – 034.14

Control of carburization and decarburization processes of alloy steels at thermochemical and thermal treatment

Valeriy Mishchenko

D.Sc. in engineering, professor
Head of Chair of applied physics
Zaporizhzhya National University
Zaporizhzhia, Ukraine

Aleksandr Menyaylo

Post-graduate student
Chair of applied physics
Zaporizhzhya National University
Zaporizhzhia, Ukraine

Abstract
The paper is devoted to solution of problems related to the high quality control of machine and chisel steels in the production process of products at the enterprises of mechanical engineering, aviation, shipbuilding. A new progressive method for control process of thermochemical and thermal treatment of steels was suggested; and for its implementation, the differential dilatometer was specifically developed.
Operating system of thermochemical treatment allows guaranteed getting of the required parameters of diffusion layer – saturating element concentration and the gradient of its distribution, the layer thickness for products of high-duty.
It is shown that by using of differential dilatometer and previously constructed analytical curves, directly in the process of steels thermochemical treatment (carburization, nitrocarburizing, etc.) it is possible to change flexibly the activity of endopotential of furnaces and, therefore, to introduce a correction to layer parameters. The designed method also makes it possible to control and prevent decarburization and scale formation of steels.
Key words: ALLOY STEEL, THERMOCHEMICAL TREATMENT, THERMAL TREATMENT, HIGH-TEMPERATURE CARBURIZATION, DECARBURIZATION, DIFFUSION LAYER PARAMETERS, DIFFERENTIAL DILATOMETER.

Dynamic development of such Ukraine industries as aircraft industry, mechanical engineering, and shipbuilding requires the development of new perspective materials and technologies of their processing for obtaining of competitive production. Increase of reliability and durability of products, which are affected by temperature, alternating loads during operation and operate under the conditions of friction and corrosion or abrasive media, is relevant task up to date.

The thermochemical treatment (TT) was widely used for surface hardening of details and tool. In order to obtain high-quality products, it is necessary to control TT processes (in particular, carbonizing, nitrocarburizing), which can be carried out in the gaseous or liquid media with the use of vacuum glow discharge, electrolytic and plasma treatment, etc. Constructional alloyed steels undergo carbonizing (diffusive surface carburization) and nitrocarburizing (saturation by carbon and nitrogen). For example, for production of tooth gears of reducers of aviation engines, the steel of the increased and high heat resistance: 14HGSN-2MA, 13H3NVM2F, 16H3NVFMB, M50NiL, etc. is used [1 … 4]. TT of these steel grades is conducted at high temperature (1220 … 1300 K) in the carbon and/or nitrogen-containing media. Quality of the workpieces can be significantly reduced due to termination of saturation while holding during TT, and to such processes as decarburization, denitration, and also excess of carbon (nitrogen) concentration on a surface.

Quality of TT is determined by formation of such diffusive layer parameters, which allow guaranteed obtaining of optimum physicomechanical and operational properties of a product. Parameters of a diffusive layer are the following: concentration of the saturated element C, a gradient of its distribution with layer depth, and also thickness of a layer V. The structural condition and properties of steel surface layer after finishing operations of TT depend on concentration of carbon on surfaces and its distributions with layer depth.

When long-term high-temperature holding during the steel heat treatment (HT) (thermohardening, annealing), there can be decarburization and the subsequent oxidation of process material surface. In particular, such processes appear most strongly when processing of cemented and high carbon steels (ShH15, ShH15SG, U8, etc.) and lead to non-collectable scrap of steel in the form of scale, and also to decrease in mechanical properties of decarburized material layer, which is the closest to the surface.

Thus, it is necessary to control the value of parameters of diffusive layer directly within TT process for obtaining of optimum properties of products. During heat treatment, it is necessary to avoid decarburization, which precedes oxidation, and therefore, losses of metal and decrease in its properties.

The objective of work is system testing, which makes it possible to control the processes of TT and HT of special steels. In the paper, it is shown that the tasks can be solved successfully by use of specially designed device – differential dilatometer [5 … 8].

The steel grades 14HGSN2MA and ShH15SG-V were selected as materials for researches (Table 1). Steel of 14HGSN2MA grade is used on “Zaporozhye machine-building design bureau “Progress” state enterprise named after academician A.G.Ivchenko” for production of tooth gears, which undergo gas carbonizing. Steel of ShH15SG-V grade is produced by PJSC “Dneprospetsstal” in Zaporizhia in the form of high-quality section iron. Heat treatment (high-temperature annealing) of section iron is necessary technological operation for production of finished products.

Table 1. Chemical composition of steels under investigated

Steel grade	The containing of alloying elements in steel, % of mas.									
	C	Mn	Si	P	S	Cr	Ni	W	Mo	V
ShKh15SG-V	0.98	1.08	0.51	0.014	0.006	1.49	0.16	0.02	0.03	0.01
14KhGSN2MA	0.13	0.9	0.6	0.019	0.012	1.5	1.7	-	0.35	0.04

Chemical composition of steel under investigation determined by spectrometer Spectromax, and the content of carbon in the cemented layer of steel 14HGSN2MA by gas analyzer LECO-CS-230. Distribution of microhardness determined by depth of decarbonized layer of steel ShH15SG-V was determined by microhardness tester PMT-3. Research of kinetics of cementation processes of steel 14HGSN-2MA and annealing of steel ShH15SG-V was carried out on the designed differential dilatometer (Fig. 1).

The application of dilatometer makes it possible to register the beginning and completion of saturation, to fix process of an decarburization (denitration), and also to control endopotential of saturating media directly during TT of steel for obtaining of specified parameters of diffusive layer in advance. Pusher mechanisms 1, 2 should not be affected by carburizing medium and undergo phase transformations during operation (the pusher mechanisms were made of steel 12X18H10T or alloy X20H80). The reference standard 5 and tubular sample 9 were made of the same steel grade, as the details subject to TT (see Fig. 1). The fixation precision of the beginning of diffusive saturation during TT can be increased by the use of hollow sample 5 (wall thickness is 1.5 mm) instead of solid one due to faster warming up in the period of TT temperature (see Fig. 1) [5, 7, 9].

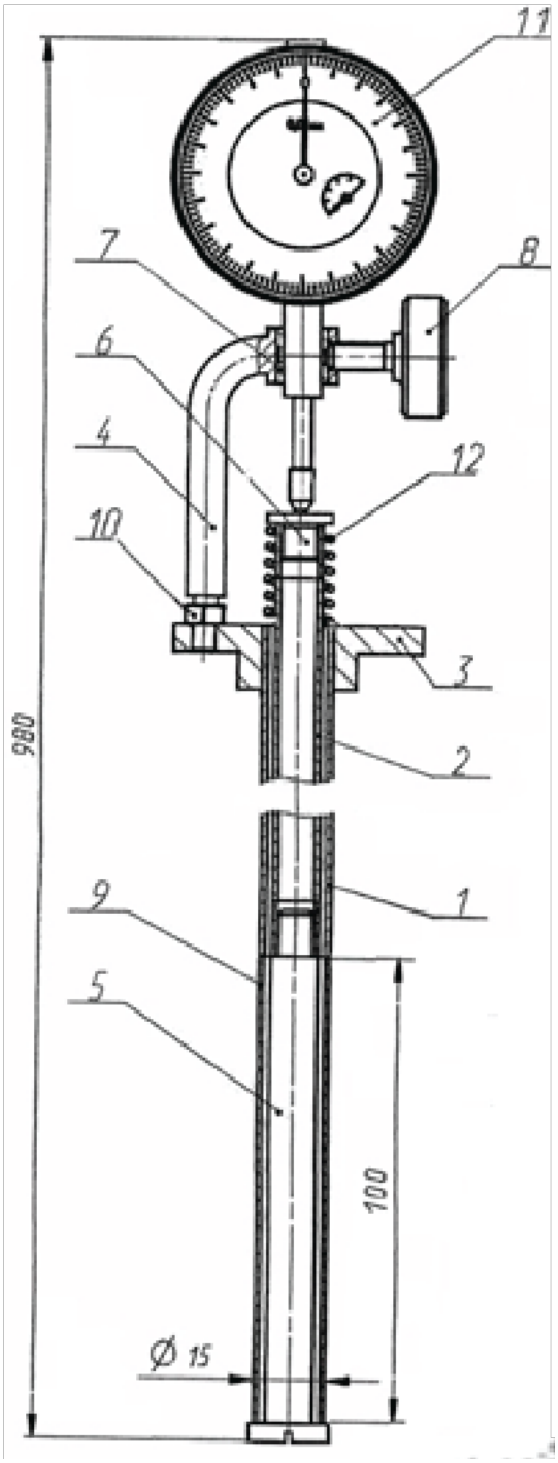

Figure 1. Differential dilatometer: 1 – external pusher, 2 – internal pusher, 3 – flange, 4 – support arm, 5 – reference standard, 6 – plate, 7 – plug, 8 – screw, 9 – sample, 10 – nut, 11 – dial indicator, 12 – a spring [9].

After reaching TT temperature, there is no difference in length of pushers 1 and 2 caused by temperature gradient when heating. In the course of TT (at invariable saturation temperature), the sample 9 elongates due to increase in carbon concentration, that is related to increase in parameter of austenite lattice [10]. At that time, the reference standard 5 maintains dimensions; because it has a special protective coating from carbon diffusion (for example, nickel layer of 0.1 mm thickness). This makes it possible to measure the sample elongation Δl by means of dial indicator 11. Directly during TT, parameters of diffusive layer can be determined by value Δl according to calibration curve. Calibration curves of dependences of layer B thickness and carbon concentration C on the surface on elongation Δl were previously constructed according to results of chemical, metallographic and durometric analyses [6, 9].

The differential dilatometer was tested at carburization of steel 14HGSN2MA and annealing of steel ShH15SG-V.

Carburization was carried out in the laboratory electric furnace SShOL 11.6/12-M3 with the use of solid carburizing material (GOST 2407-83) at a temperature of 1300±10 K (Fig. 2). For studying of saturating medium influence on diffusive layer parameters, the following compositions of carburizing material are selected: 1) 100% of fresh carburizing material; 2) 50% of fresh and 50% of sampled carburizing material (by volume). It took 29 minutes from the moment of loading of the container with dilatometer in the furnace to increase the temperature in the container to 1300 K, and then the temperature in container was invariable during the whole isothermal time. When holding, the value Δl was affected only by carbon concentration in a sample for the selected composition of carburizing material; as the value of reference standard remained fixed (Fig. 3).

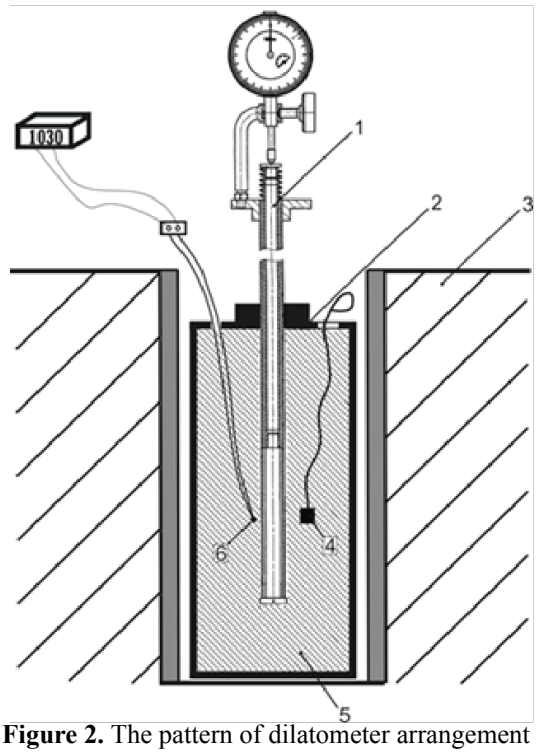

Figure 2. The pattern of dilatometer arrangement in the container: 1 –dilatometer, 2 – container, 3 – electric furnace, 4 – pilot joint, 5 – carburizing material, 6 – thermocouple [9].

Parameters of curves 1 and 2 for selected mode of carburizing are determined on Fig. 3 by composition of the saturating media (carburizing material).
In spite of the fact that the fresh carburizing material (100%) must be more active, lower values of Δl (see curve 2 in Fig. 3) are observed, in comparison with the case when using of mix of fresh and sampled carburizing (see curve 1 in Fig. 3). It can be explained by the fact that during isothermal holding when carburizing, shrinkage of carburizing material took place. As a result of the last the content of CO_2 increased, that is the ratio CO-CO_2 gases in the container changed, which in turn, caused the decrease of the carburizing material activity.

By means of a gas analyzer LECO-CS-230, it was established that after carburizing with the use of fresh (100%) carburizing material, the content of carbon in tubular sample (at the depth up to 300 microns from a surface) was 1.15-1.32% of mas.

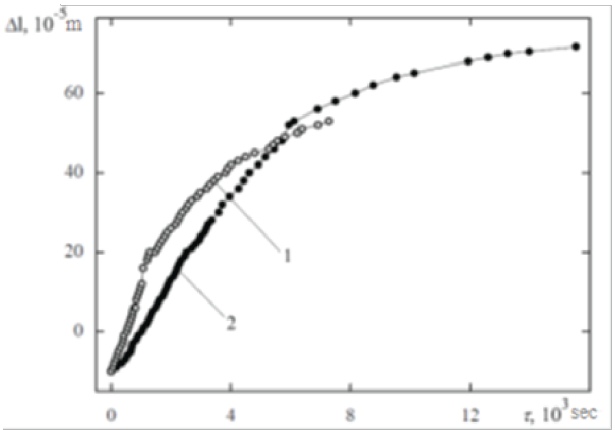

Figure 3. Dependence of elongation Δl of sample on time τ during isothermal holding when carburizing of steel 14HGSN2MA for carburizing material of such composition: 1) 50% of fresh, 50% sampled (by volume); 2) 100% of fresh.

For use of the dilatometer during TT, it is also necessary to construct the calibration curves of dependences of the maximum carbon concentration in a layer C and thickness of layer B on elongation Δl of sample, where certain distribution of carbon concentration and structural condition with layer depth corresponds to each point of the diagram. Thus, it is possible to control the value of diffusive layer parameters directly during TT if there is opportunity to change the potential of the saturation atmosphere (gas, vacuum carburizing, etc.).

Annealing of steel ShH15SG-V was carried out in the mine electric furnace SShOL – 11.6/12-M3 at a temperature of 1070 K for 19 hours in the air atmosphere (Fig. 4). The thermal furnace atmosphere, which is not protective (in particular, the air atmosphere), is conductive to decarburization and subsequent oxidation of steel surface [11].

The reference standard and tubular sample of the dilatometer were made of steel ShH15SG-V (see Table 1). The external surface of reference standard, and also internal surface and butt end of a tubular sample were covered with a nickel layer of 0.1 mm in thickness for protection against oxidation.

Pilot joints and dilatometer were charged into the furnace after its preliminary warming up to 1070 K. The moment of full warming up of a tubular sample up to the annealing temperature (in 720 sec. after loading of the dilatometer) was considered as reference point of time in case of curve construction of dependence of sample shrinkage Δl on time τ while annealing of steel ShH15SG-V in the air (Fig. 9, curve 2).

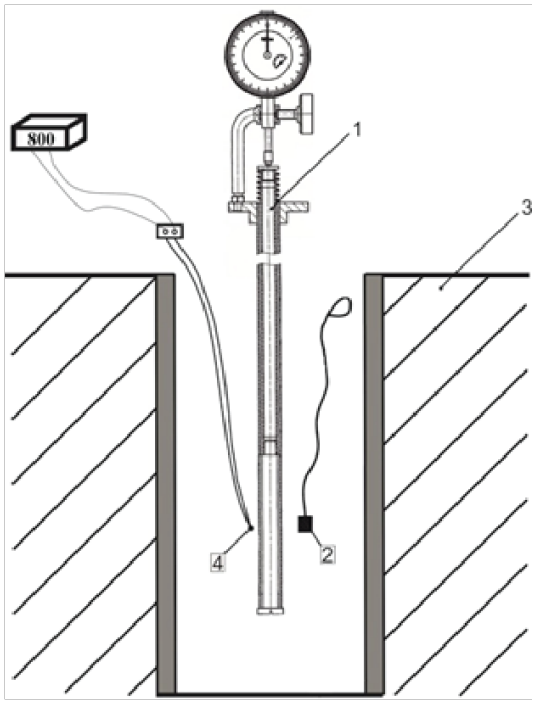

Figure 4. The diagram of dilatometer arrangement in the mine electric furnace SShOL – 11.6/12-M3 when annealing of steel ShH15SG-V: 1 – differential dilatometer, 2 – pilot joint, 3 – electric furnace, 4 – thermocouple.

When annealing of steel ShH15SG-V in the electric furnace (in the air atmosphere), the thickness of oxidized layer of pilot joints increased depending on holding duration (Fig. 4, 5a). The conducted measurements of microhardness of pilot joints surface layer of steel ShH15SG-V after annealing in the air allowed determining of the decarbonized layer value, which did not exceed 0.03 mm throughout the whole process of annealing.

Thus, reduction of length Δl of tubular sample over time τ (see Fig. 5, curve 2) could take place as a result of simultaneous effect of such factors: reduction of austenite lattice parameters as a result of decarburization and oxidation processes.

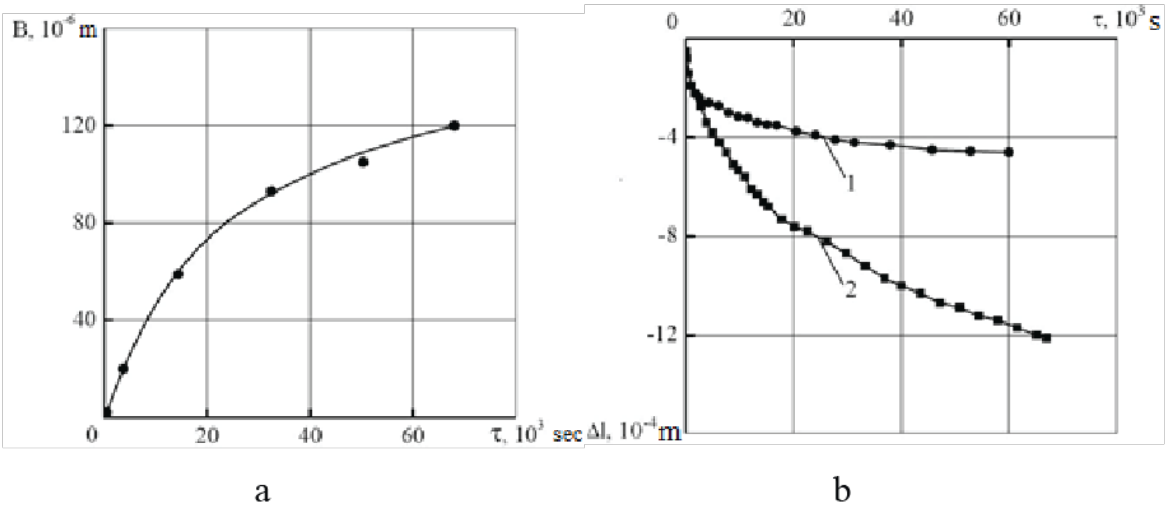

Figure 5. Dependences of change of samples parameters on duration τ of steel ShH15SG-V annealing: a – thickness of oxidized layers B of pilot joint when annealing in the air; b – shrinkage Δl of tubular sample (1 - in the atmosphere of the chamber furnace of PJSC Dneprospetsstal; 2 – in the air).

The designed dilatometer was also used during research of decarburization process of high-quality section iron made of steel ShH15SG-V (Table 1). The device was tested in the chamber furnace of thermal department of PJSC Dneprospetsstal in Zaporizhia.

Annealing of steel ShH15SG-V was carried out according to the following mode: heating of section iron for 5 hours up to the temperature of 1070 K, holding at this temperature was 17 hour (warming-up of heat treatment load – 3 hours, duration of holding of warmed section iron – 14 hours); cooling of the furnace to the temperature of 950 K for 6 hours, holding at this temperature was 6 hours; cooling to 850 K for 5 hours; cooling to 290 K in case of the furnace open door.

The dilatometer was arranged in a place of thermocouple 1 in the chamber furnace (Fig. 6) at the time of reaching of annealing temperature (1070 K). The tubular sample of the differential dilatometer was near the top of heat treatment load.

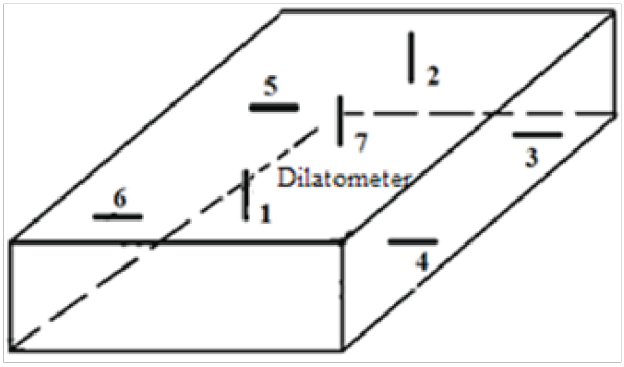

Figure 6. The pattern of arrangement of thermocouples and dilatometer in working space of the chamber furnace

Depth of the decarbonized layer, which was about 0.6 mm (Fig. 7), was determined by metallographic and durometric methods of the analysis. The gradual increase of microhardness from 3050 to 4500 MPa in the direction from surface to steel core was observed.

Change of tubular sample dimensions Δl of holding time τ when annealing of steel ShH15SG-V in the atmosphere of chamber furnace of thermal department of PJSC Dneprospetstal is presented in Fig. 5 (curve 1). The value Δl reduction (reduction of sample) causes the necessity of change of endopotential of the furnace atmosphere for postreduction of sample sizes to the reference value that allows avoiding of further decarburization and oxidation of high-quality section iron.

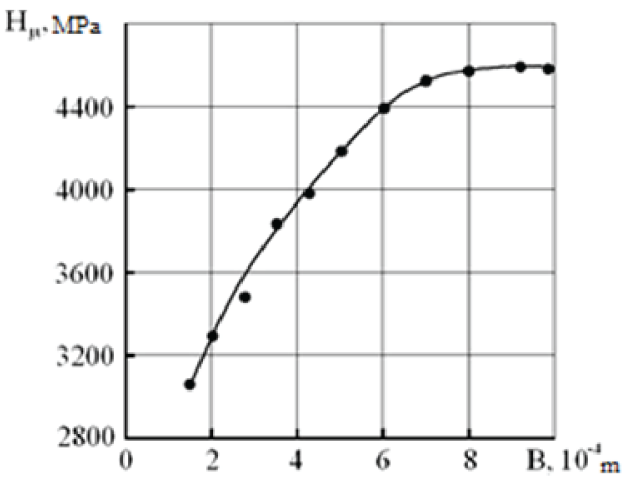

Figure 7. Dependence of microhardness distribution on depth of the decarbonized layer of steel ShH15SG-V after annealing

By means of the designed differential dilatometer and calibration curves, it is possible to control decarburization degree directly in the course of annealing

of both steel ShH15SG-V and other alloys for the purpose of its full prevention by formation of the protective atmosphere in the chamber furnace [12].

Conclusions

1. In the paper, the testing results of designed differential dilatometer, by means of which it is possible to control the processes of thermochemical and thermal treatment of steel, are presented.

2. By means of the dilatometer and calibration curves, it is possible to obtain guaranteedly the necessary parameters of diffusive layer by change of activity of endopotential of the saturation atmosphere directly during TT process.

3. The developed device and way of its use allow preventing of undesirable phenomena of decarburization and scale formation directly during annealing of special steels by change of atmosphere potential in the thermal furnace.

4. Testing results of the dilatometer when annealing made it possible to introduce the recommendation on production of high-quality section iron of steels ShH15 and ShH15SG at the electrometallurgical enterprise PJSC Dneprospetsstal in Zaporizhia.

5. The design of the differential dilatometer and way of its application are protected by patents of Ukraine for inventions.

References

1. Lazechniy I.M., Lisica O.V., Mischenko V.G., Snignoy V.L., Snignoy G.V. (2011) The transformation of austenite in cemented steel 13H3NVM2F. *Novi materiali I tehnologii v metalurgii ta mashinobuduvanni*. No. 2, p.p. 47-52.
2. Lazechniy I.N., Banas I.P. (2005) Formation of structure and properties of carburized steels of different heat resistance during TT process. *Novi materiali I tehnologii v metalurgii ta mashinobuduvanni*. No. 1, p.p. 37-44.
3. Ervin V. Zaretsky. Rolling Bearing Steels – A Technical and Historical Perspective. National Aeronautics and Space Administration, Glenn Research Center, Cleveland, 2012. 16 p.
4. Lahtin Y.M., Arzamasov B.N. Himiko-termicheskaia obrabotka metalov. [Thermochemical treatment of metals]. Moscow, Metallurgiya, 1985. 216 p.
5. Patent No 94867 Ukraine, IPC G01N25/16, G01N25/48, G01B5/02, G01B7/16. The differential dilatometer/ Mischenko V. G.; patent owner Zaporizhia National University. No a201007916; Appl. 24.06.2010 ; publ. 10.06.2011, bull. No 11.
6. Patent No 94552 Ukraine, IPC SS/00, G01N13/00, G01B5/02, G01B21/02. The method of determining the parameters of the diffusion layer during thermochemical treatment / Mischenko V. G.; patent owner Zaporizhia National University. No a201007915; Appl. 24.06.2010 ; publ. 10.05.2011, bull. No 9.
7. Patent No 105734 Ukraine, IPC G01N25/16, G01N25/48, G01B5/02. The differential dilatometer / Mischenko V. G.; patent owner Zaporizhia National University. No a201308274; Appl. 01.07.2013 ; publ.10.06.2014, bull. No 11.
8. Patent No 108280 Ukraine, IPC C21D 3/00, C21D 9/00, C21D 11/00, G01F 17/00, G01N 13/00, G01N 25/00, G01N 25/16, G01B 5/02, G01B 21/02 Method of decarburization control of parts during their thermal treatment / Mischenko V. G.; patent owner Zaporizhia National University. No a 201308273; Appl. 01.07.2013 ; publ.10.04.2015, bull. No 7.
9. Meniailo A.I. Control of the parameters of the diffusion layer in the process of thermochemical treatment of steel. *Stroitelstvo, materialovedenie, mashunostroenie*. (collection of scientific papers, Series: "*Starodubovskie chteniya 2015*") Vol. 80, Dnepropetrovsk, Prydniprovska State Academy of Civil Engineering and Architecture, p.p. 197-203.
10. Mogilevsciy L.D., Ramma S.N. Bogumil. Prgenosil Nitrocfementaciia. Leningrad, Mashinostroenie, 1969. 212 p. (p.p. 55-56)
11. Basdirev S., Ivanov V.I., Nesterenko T.M., Sereda B.P. (2002) Reduction of calibrated steel decarburization in thermal furnaces. *Metaloznavstvo ta obrobka metaliv*. No. 2, p.p. 31 - 34.
12. Krasnokytckiy P.G., Kolesnik F.I. *Teplotehnichni procesi i konstrukcii nagrivalnih pechey*. [Thermal processes and structures of heating furnaces]. Kyiv, ISDO, 1995. 248 p.